KIT MODERNIZACIÓN VVVF
VVVF MODERNIZATION KIT

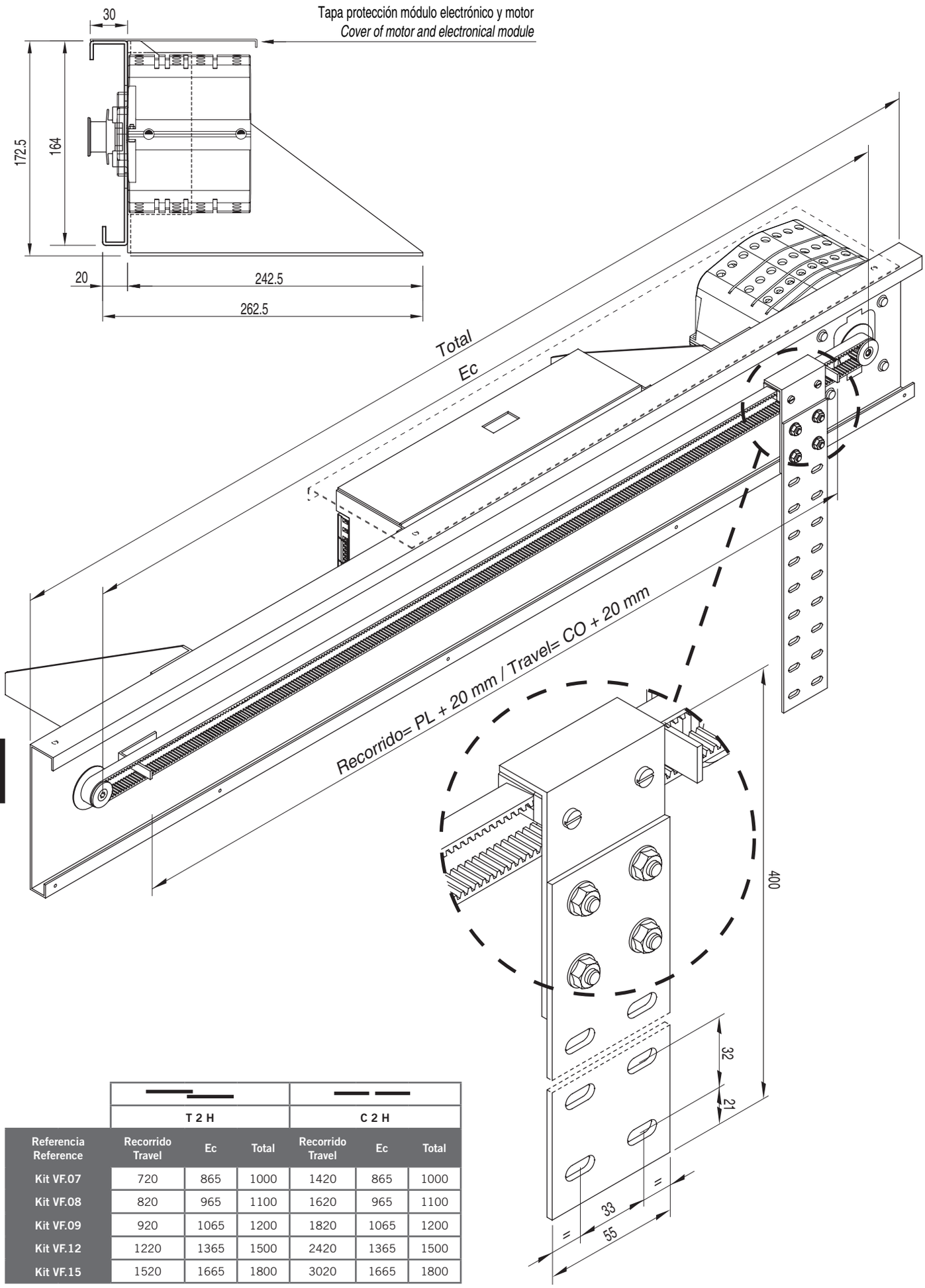

	T 2 H			C 2 H		
Referencia Reference	Recorrido Travel	Ec	Total	Recorrido Travel	Ec	Total
Kit VF.07	720	865	1000	1420	865	1000
Kit VF.08	820	965	1100	1620	965	1100
Kit VF.09	920	1065	1200	1820	1065	1200
Kit VF.12	1220	1365	1500	2420	1365	1500
Kit VF.15	1520	1665	1800	3020	1665	1800