PUERTA RELLANO CENTRAL 2 HOJAS
2 PANEL CENTRE PARTING LANDING DOOR

40/10
DIN 18.091

fermator
AUTOMATIC DOORS FOR LIFTS

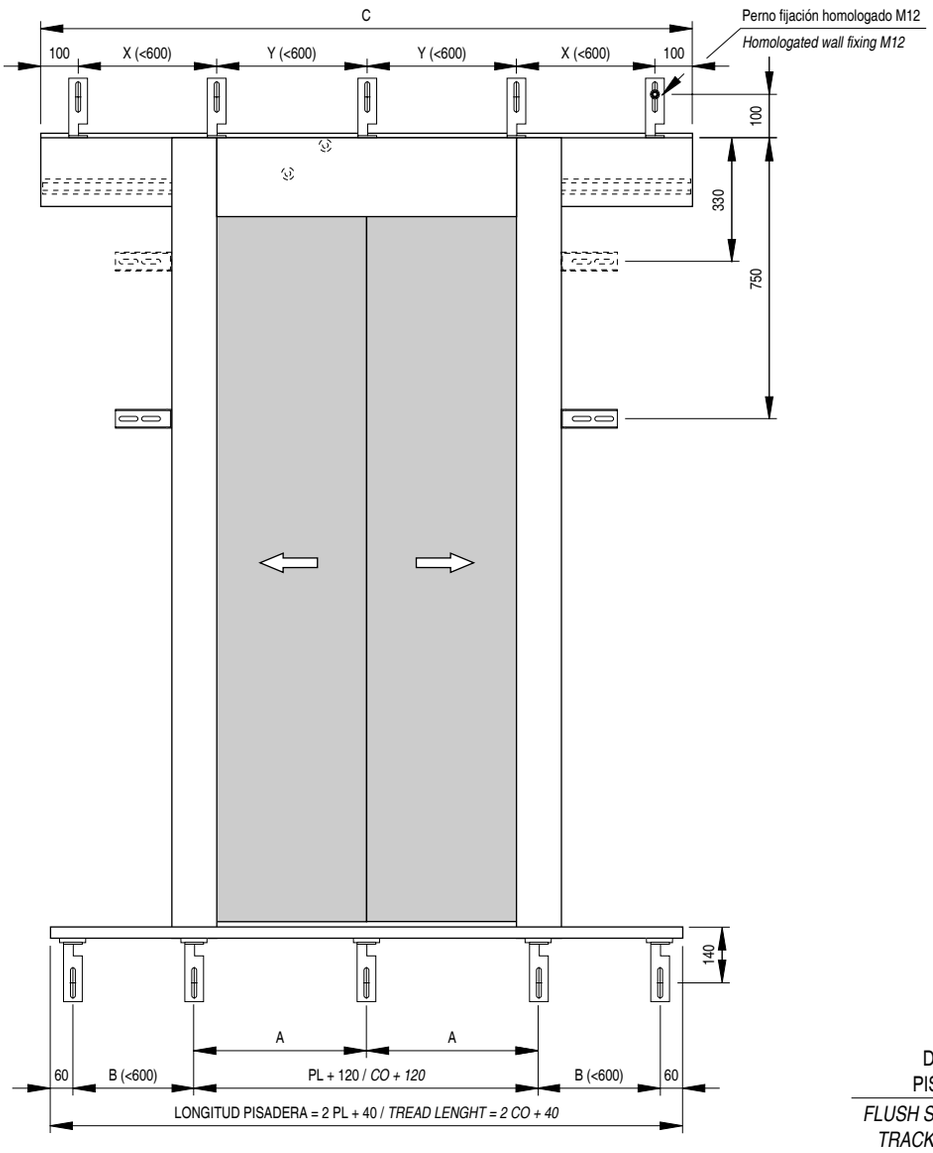

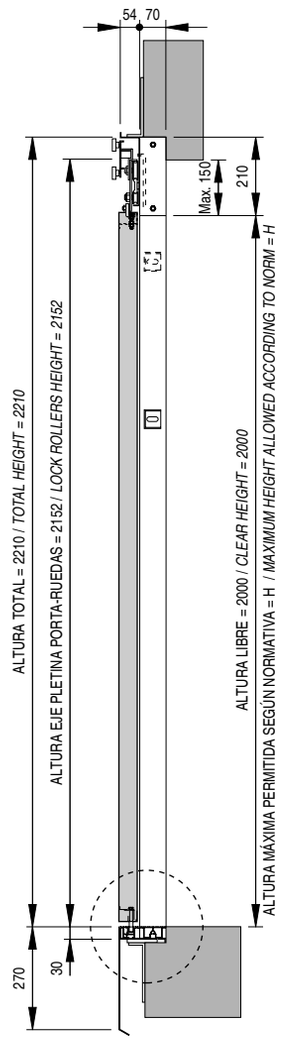

DETALLE PISADERA
FLUSH SILL AND TRACK DETAIL

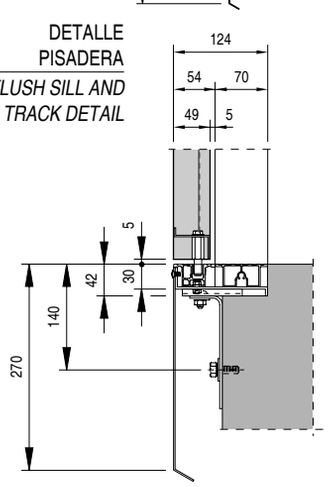

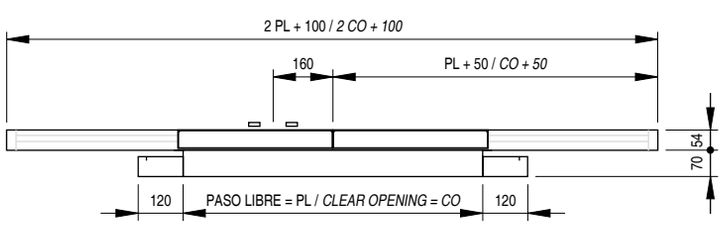

PL / CO	600	650	700	750	800	850	900	1000	1100	1200	1300	1400	1500	1600	1700	1800	1900	2000
A (mm)	360	385	410	435	460	485	340	373	407	330	355	380	345	344	365	384	404	424
B (mm)	290	255	280	305	330	355	380	430	480	530	580	315	340	365	390	415	440	465
X (mm)	250	275	300	325	350	375	400	450	500	550	600	325	350	375	400	425	450	475
Y (mm)	600	325	350	375	400	425	450	500	550	60	433	467	500	533	567	600	475	500
H	≤ 2500												-					
R	4	5	5	5	5	5	5	5	5	5	6	8	8	8	8	8	9	9
S	3	5	5	5	5	5	6	6	6	7	7	9	10	10	10	10	10	12
T	9	12	12	12	12	12	13	13	13	14	15	19	20	20	20	20	21	23

☐ Puertas homologadas TÜV (DIN 18091). R: Nº. de soportes en mecanismo de rellano. S: Nº. de soportes en apoyo pisadera. T: Nº. de soportes total.
☐ Doors certified by TÜV (DIN 18091). R: Number of supports for landing mechanism. S: Number of supports for support track. T: Total number of supports.