PUERTA RELLANO CENTRAL 4 HOJAS
4 PANEL CENTRE PARTING LANDING DOOR

Fermator
AUTOMATIC DOORS FOR LIFTS

Puerta con frontis y doble enclavamiento
Door with infill panels and two locking devices

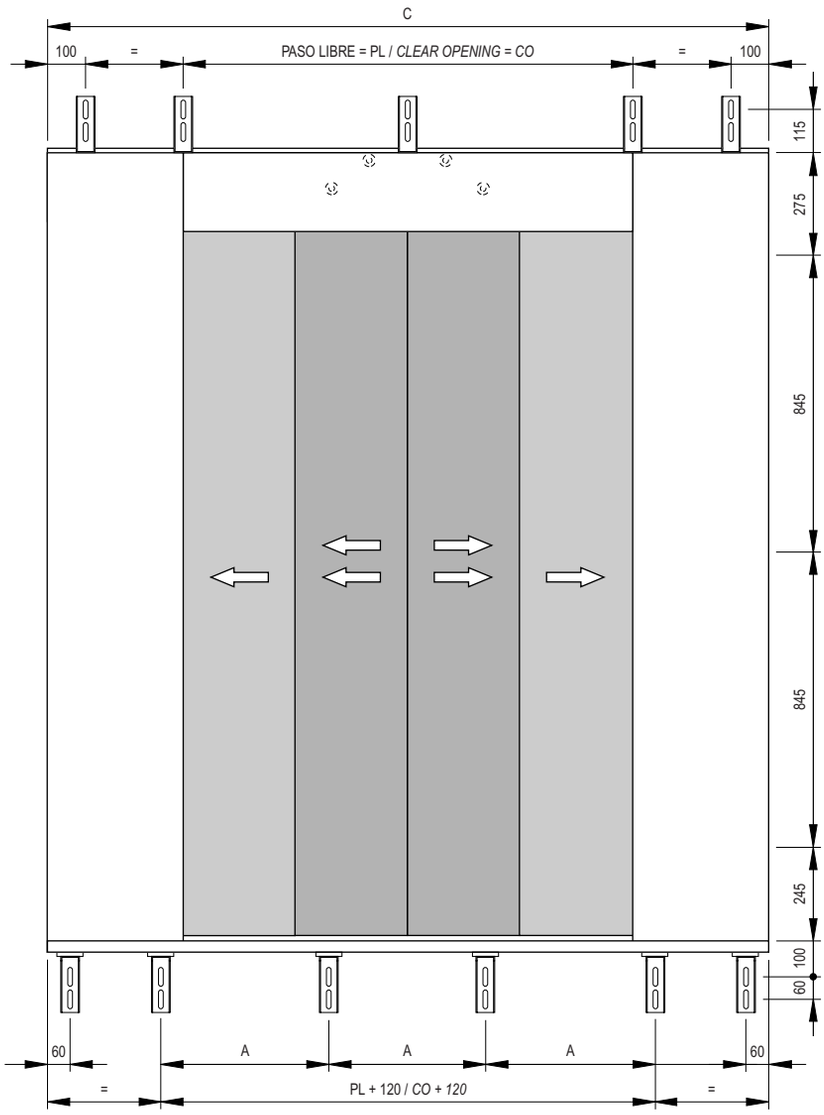

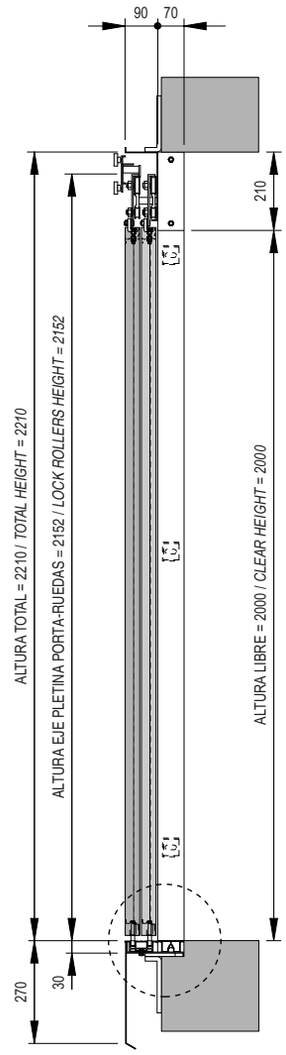

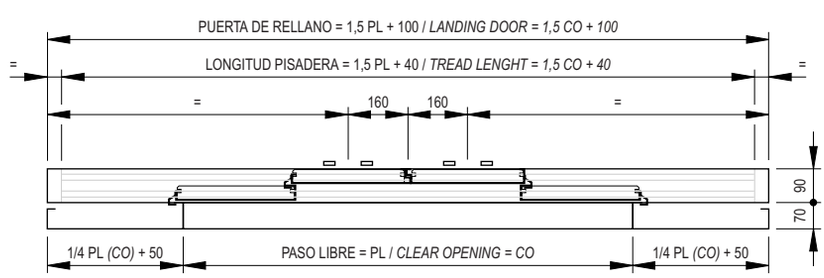

DETALLE PISADERA

FLUSH SILL AND TRACK DETAIL

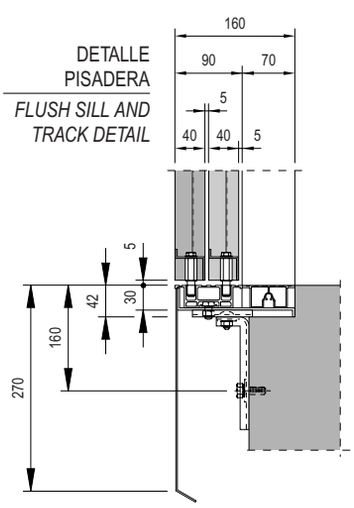

PL / CO	1200	1300	1400	1500	1600	1700	1800	1900	2000	2100	2200	2300	2400
A	330	355	380	324	344	364	384	404	353	370	387	403	360
C	1900	2050	2200	2350	2500	2650	2800	2950	3100	3250	3400	3550	3700
S	7	7	8	8	8	9	9	9	10	10	10	11	11
T	12	12	13	13	13	14	15	15	16	16	16	16	17

S: Nº. de soportes en apoyo pisadera. T: Nº. de soportes total.
S: Number of supports for support track. T: Total number of supports.